Simulations, Background and Sensitivity Estimations for the NνDEx Experiment

Emilio Ciuffoli

Institute of Modern Physics, Chinese Academy of Sciences, Lanzhou, China

May 9, 20203

No ν Double beta decay Experiment

- High Pressure $^{82}SeF_6$ TCP detector, Q-value=2.996 MeV $\Rightarrow$ higher than most of the natural background
- Signal-background discrimination via event topology
- Topmetal-S sensor to detect negative ions, excellent energy resolution, $\sim$1% FWHM $\Rightarrow$ ROI: 2.98-3.01 MeV
- Placed at China JinPing Laboratory (CJPL), 2,400 m rock overburden (deepest undeground laboratory in the world) $\Rightarrow$ background strongly suppressed

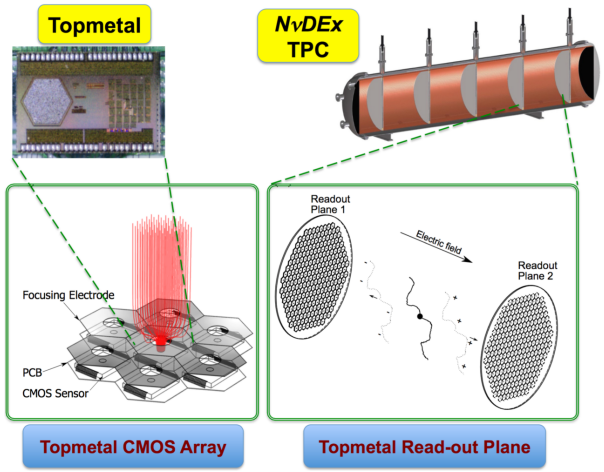

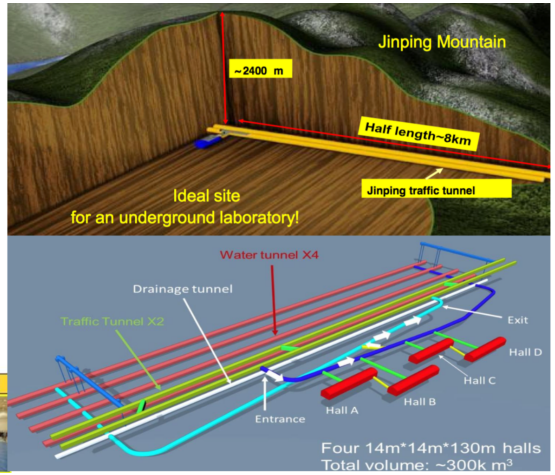

Sources Of Background

Neutrinoless double beta decay experiments require an extremely low-background environment $\Rightarrow$ a careful study of the background budget is crucial for the success of the experiment

3 main sources of background

- Natural radioactivity $\Rightarrow$ in principle α's, β's and γ's, but the first two are easily shielded, only the latter is relevant
- Cosmogenic activation of the material of the detector $\Rightarrow$ activation rate is negligible underground, but it is a problem on the surface
- Neutron background $\Rightarrow$ β's can be created directly in the fiducial volume
- Also: cosmogenic muons background (negligible at CJPL, due to the rock overburden), radon, etc...

Detector

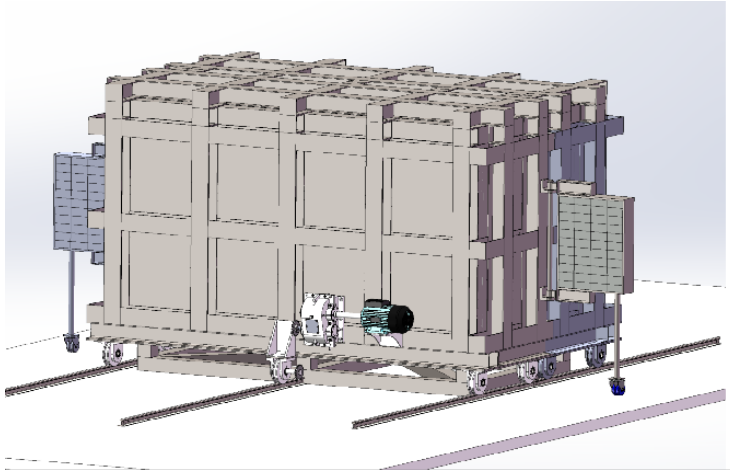

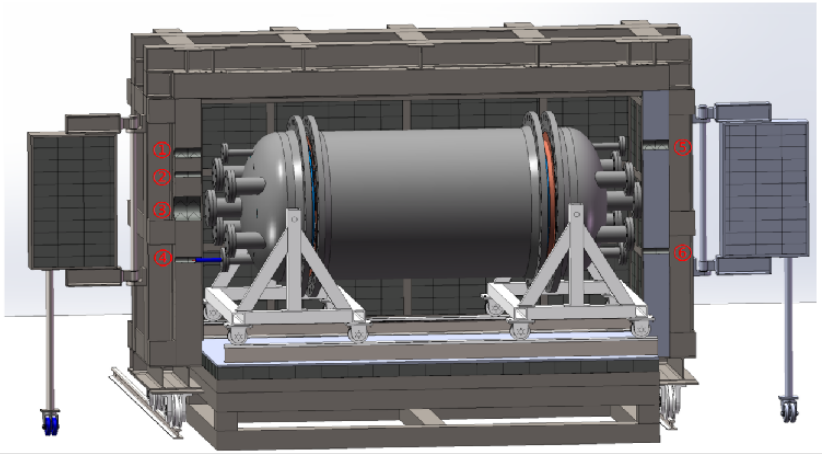

A 20 cm thick lead shield is placed around the detector to stop the γ rays

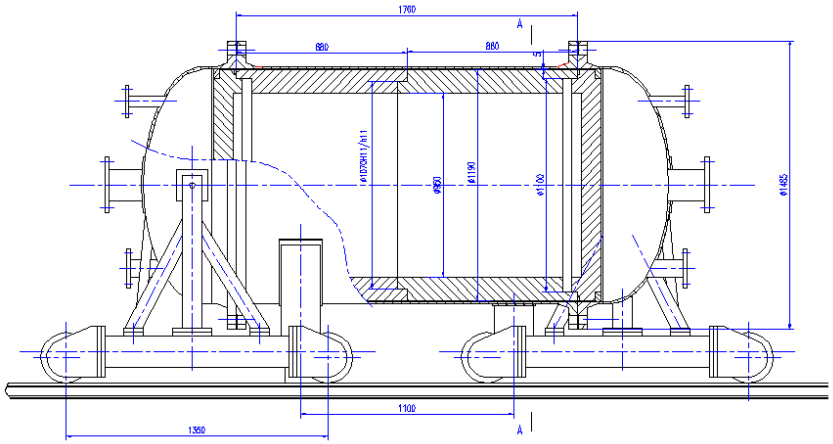

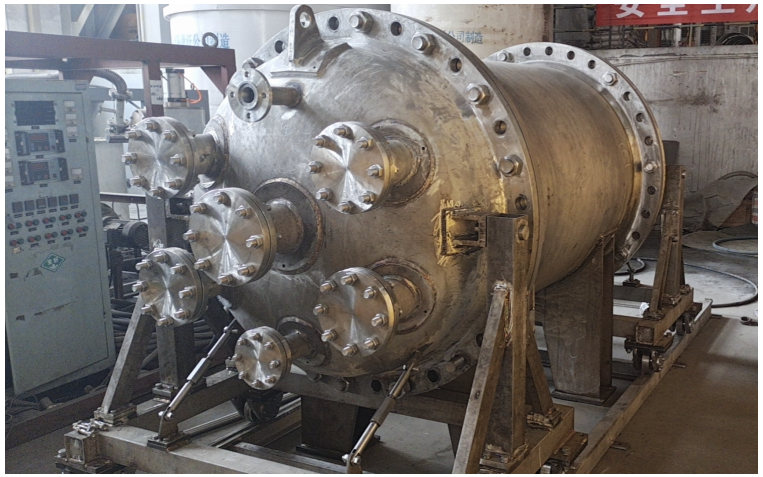

Inner Copper Shield

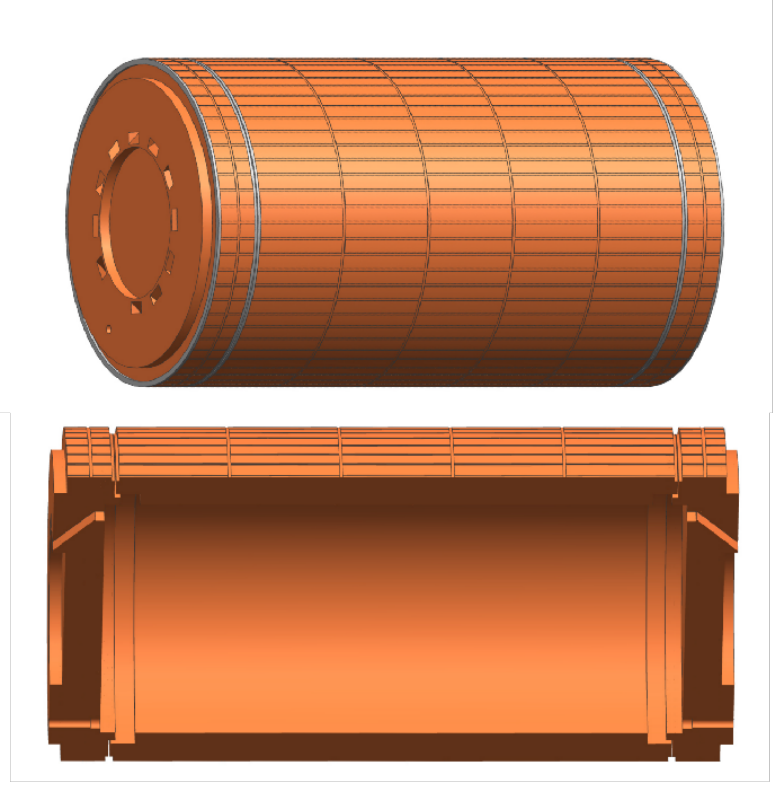

- Low-radiation oxygen-free copper
- 12 cm thick

Field Cage

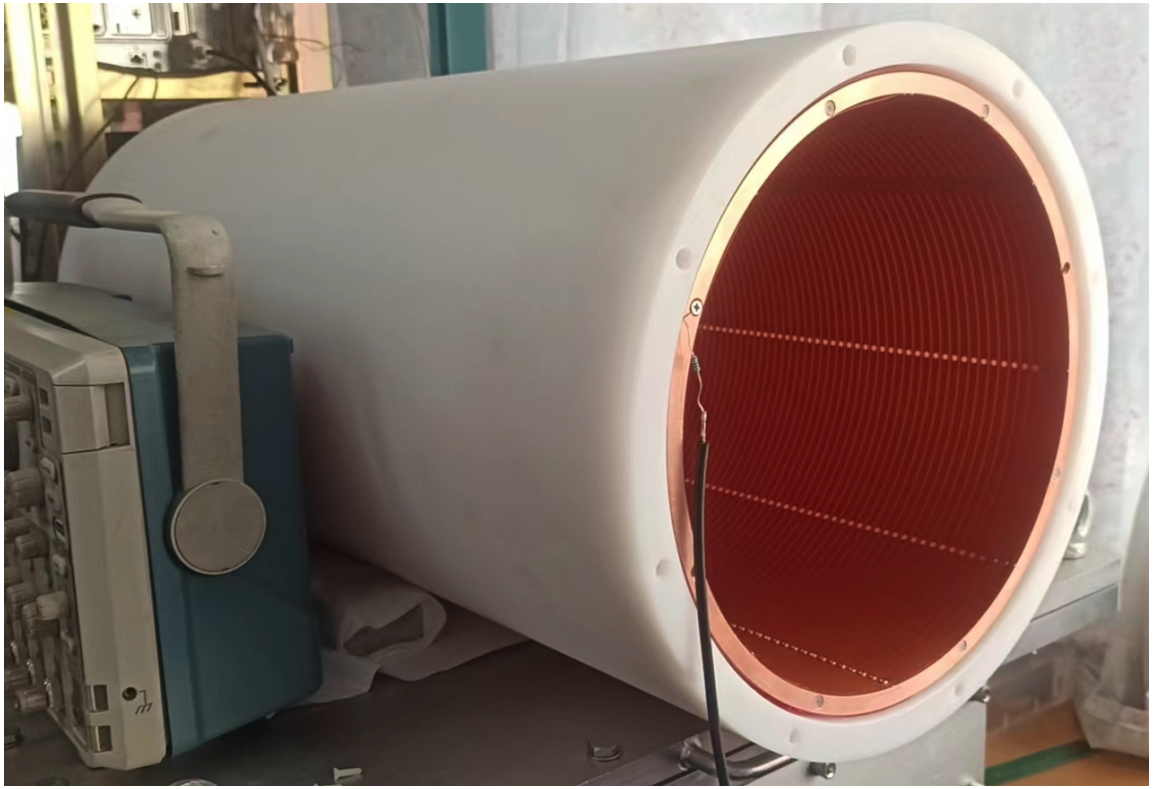

- POM insulator layer + POM supporting structure + FPCB
- In the simulations, approximated as 3.5 cm thick plastic cylindrical shell

γ lines

- Main contribution to γ flux from ^{235}U and ^{232}Th decays
- Due to the high Q-value, we are above the 2.614 MeV line from ^{232}Th decay chain (^{208}Tl)$\Rightarrow$ γ background considerably reduced
- Main contribution from ^{235}U decay chain (^{214}Bi)

Instead of simulating the full decay chain, we took the γ lines information from the ENDF/B-VIII.0 database and wrote a code that create γ's according to that distribution

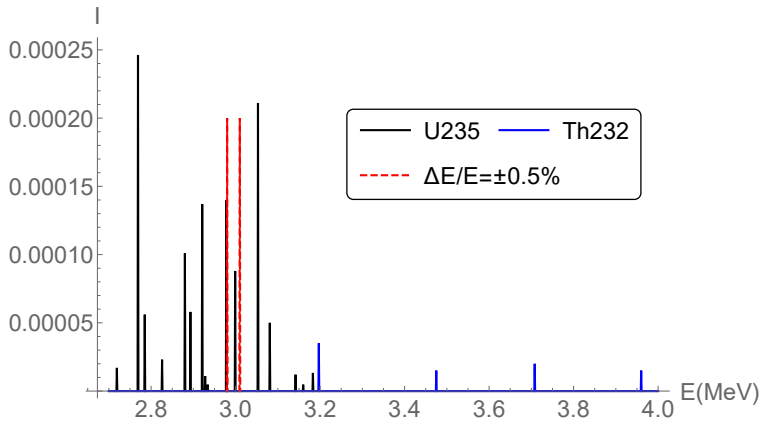

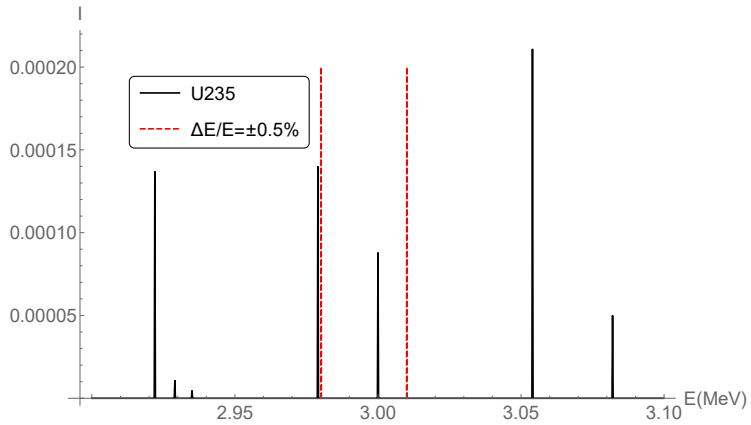

γ lines for ^{235}U and ^{232}Th from ENDF/B-VIII.0 database

γ Background: Radioactive Contamination

Values of radioactivity assumed in the simulations for different part of the geometry (for the materials of the detector, NEXT values were used)

Material	Subsystem	^{238}U Activity (mBq/kg)
Concrete	Experimental hall	6.8×10^3[1]
Lead	External shielding	0.37 [2]
HDPE	External shielding	0.23 [2]
Steel	Pressure vessel	1.9 [2]
Copper	Inner copper shielding	0.012[2]
POM	Field cage	0.23[2]

[1] H. Ma *et al.*, "In-situ gamma-ray background measurements for next generation CDEX experiment in the China Jinping Underground Laboratory.", Astropart. Phys., 128:102560, 2021.
[2] V. Alvarez *et al.*,"NEXT-100 Technical Design Report (TDR): Executive Summary" NEXT-TDR, JINST,6237:T06001, 2012.

γ Background

The main source of γ background is the field cage and POM insulator, everything else is strongly suppressed by lead and ICS

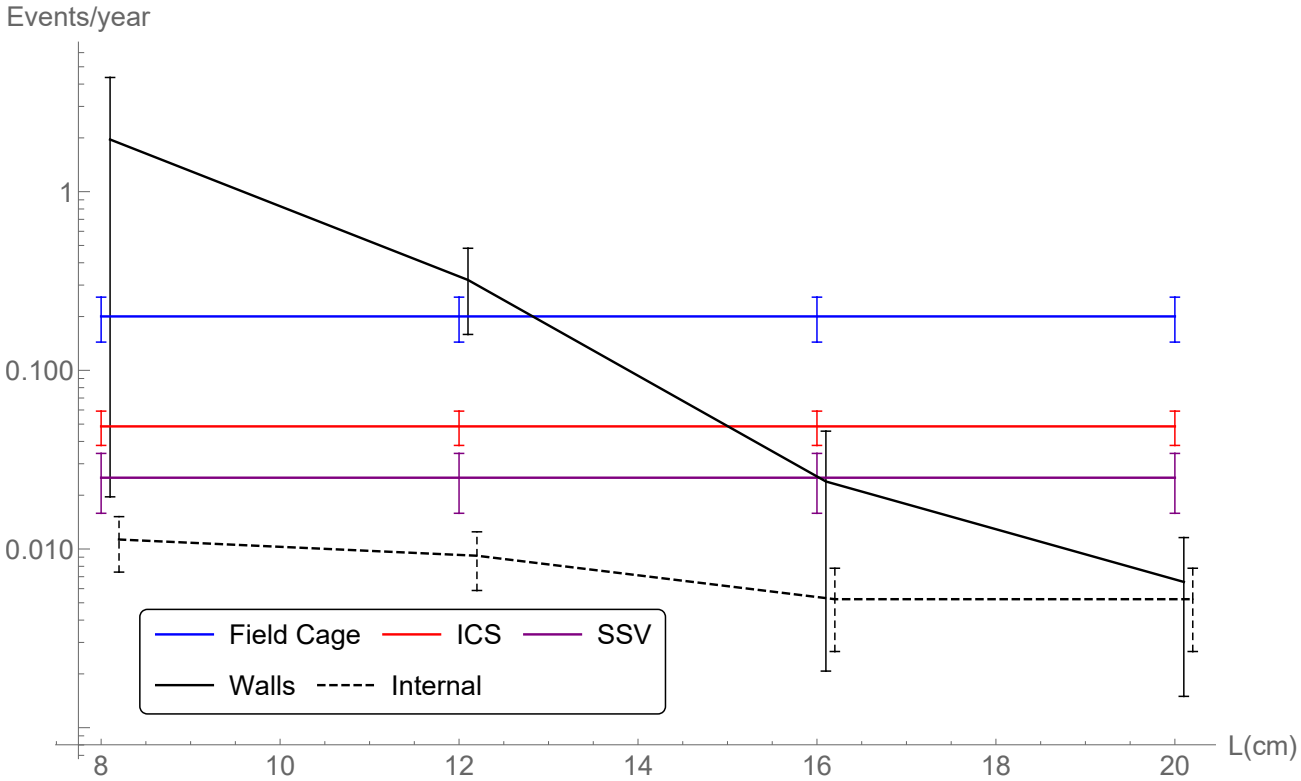

Total background: 0.29±0.06 events/year **without** topological cuts ($\simeq (9.7 \pm 1.9) \times 10^{-5}$events/keV kg yr). For a comparison, in NEXT, **with** topological cuts ($\simeq$ a factor 10), the estimated background is $\simeq 8 \times 10^{-4}$events/keV kg yr

Neutron Spectrum

We used the neutron spectrum reported in **Q.D. Hu** *et al.*, **Nucl.Instrum.Meth.A 859 (2017) 37-40**

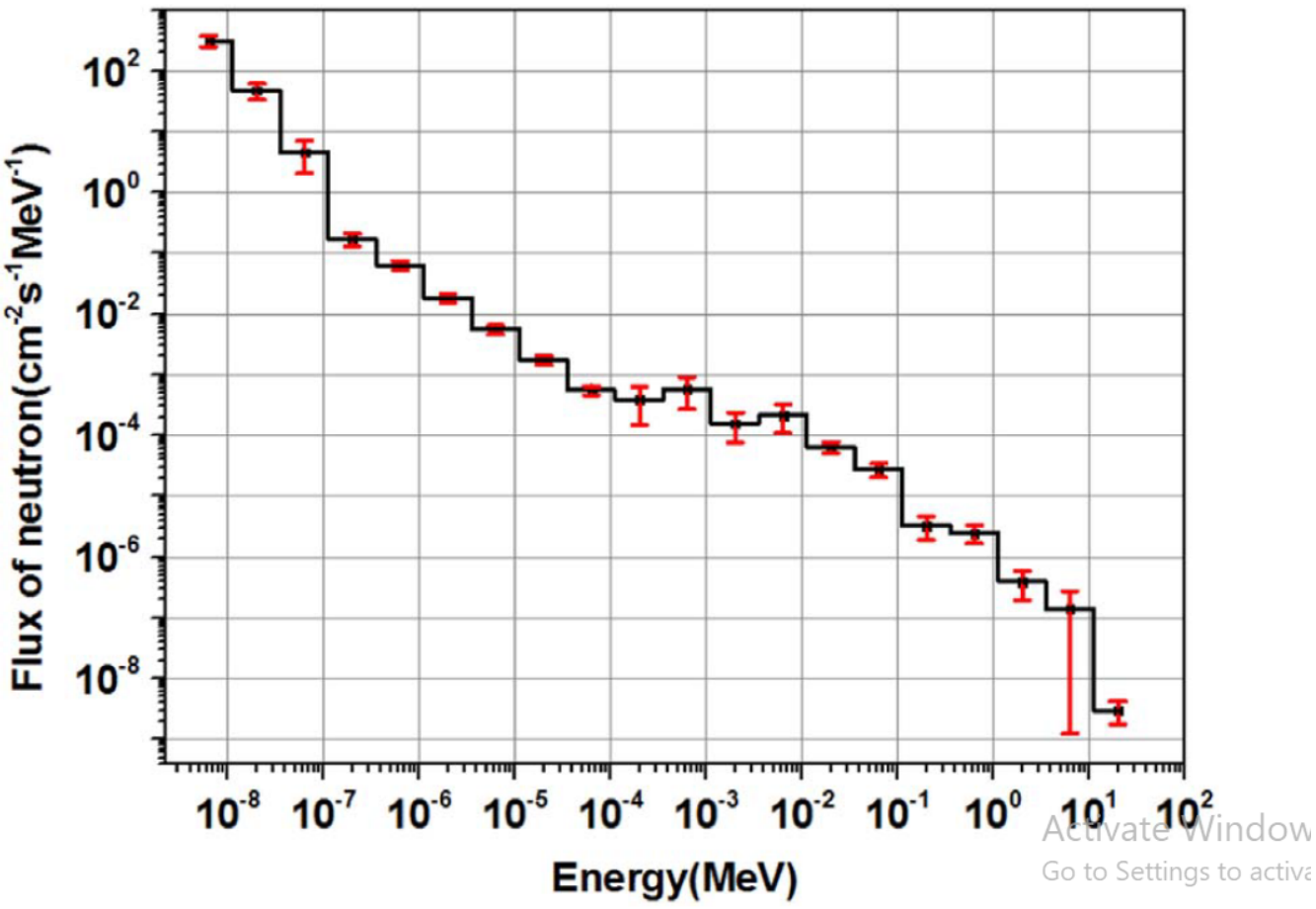

Total neutron flux: $(2.69 \pm 1.02) \times 10^{-5} cm^{-2} s^{-1}$

Neutron Activation

Two possible sources of neutron-induced background: γ emission from neutron capture (discussed later) and β decay in the fiducial volume. $SeF_6 \Rightarrow$

$$n + {}^{82}\mathrm{Se} \rightarrow {}^{83}\mathrm{Se} \rightarrow \bar{\nu}_e + e^- + {}^{83}\mathrm{Br} \rightarrow {}^{83}\mathrm{Kr} + \bar{\nu}_e + e^-$$
$$n + {}^{19}\mathrm{F} \rightarrow {}^{20}\mathrm{F} \rightarrow \bar{\nu}_e + e^- + {}^{20}\mathrm{Ne}$$

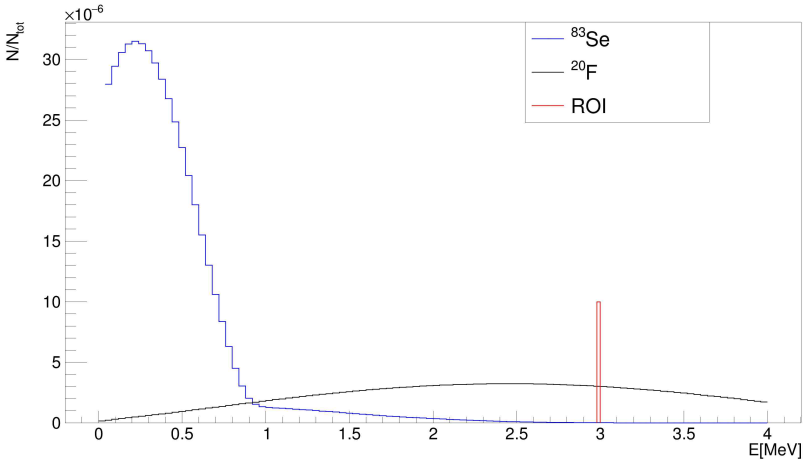

Q-value of ^{83}Se$\simeq$3.7,0.9 MeV
Q-value of ^{20}F$\simeq$ 7 MeV $\Rightarrow$ major contribution to background, fraction of β in ROI: $\simeq 9 \times 10^{-3}$

- To shield γ's$\Rightarrow$ high-Z materials (ex: lead)
- To shield neutrons $\Rightarrow$ low-Z atoms (ex: H) $\Rightarrow$ HDPE shield

HDPE Shield

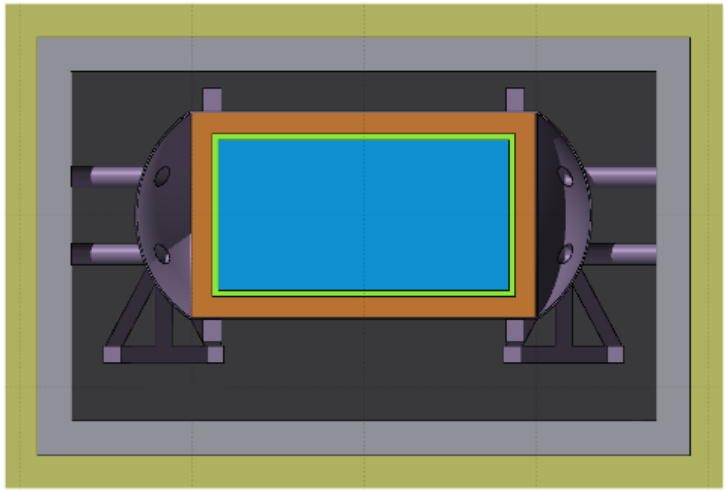

(a) External

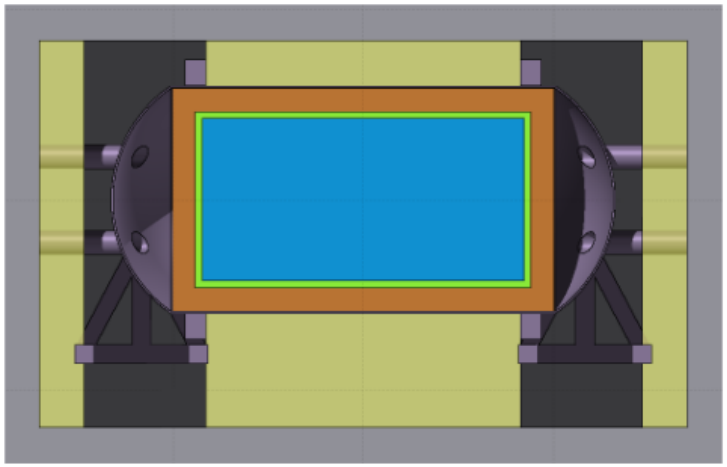

(b) Gap

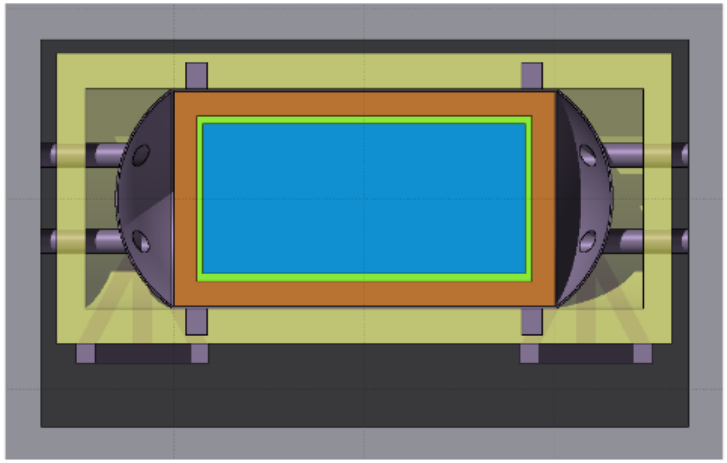

(c) Internal

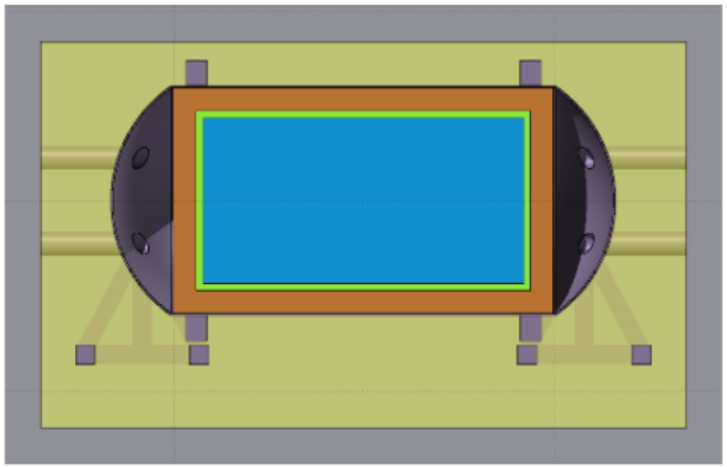

(d) Full

^{20}F Background

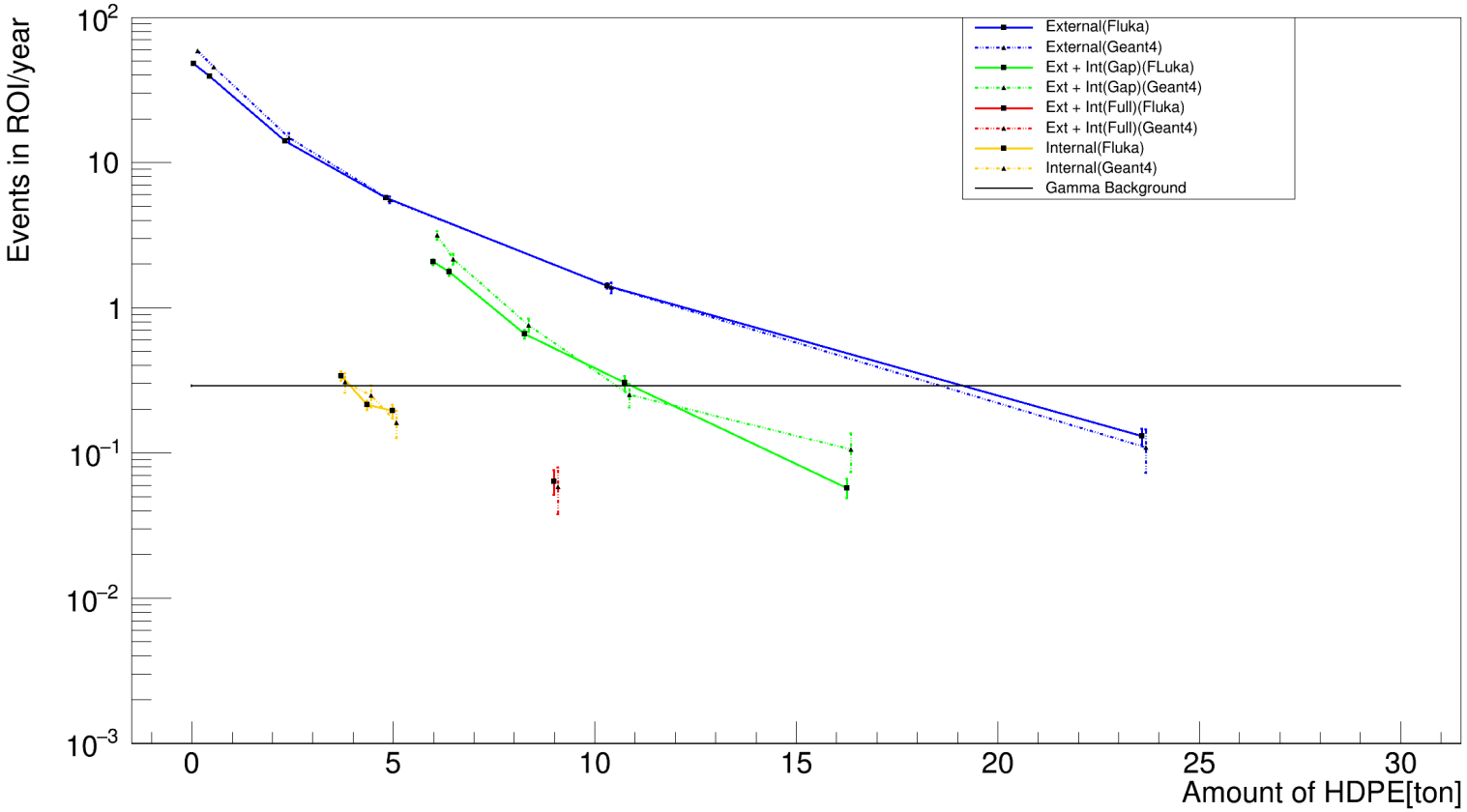

Using only internal HDPE shield: fast neutron background between 0.07 (full) and 0.15 (20 cm) events/year $\Rightarrow$ lower than γ's

Neutron Induced Gamma's

- However, neutrons can induce the emission of γ's as well, via (n,γ) or (n,n'γ) reactions.
  For example:

$$^{207}Pb + n \rightarrow {}^{208}Pb + \gamma$$

$$m_{207} + m_n - m_{208} \simeq 7\mathrm{MeV}$$

- If HDPE is inside the lead shield, a large amount of gamma's will be produced in lead, leading to a significant background
- If HDPE is placed inside the lead shield, it will not reduce significantly the background $\Rightarrow$ external HDPE shield needed (work in progress)

Cosmogenic Activation

- Cosmogenic muons can activate nuclei in the material of the detector on surface
- ^{56}Co is the most dangerous isotopes, after exposure in Lanzhou, estimated background $\sim$ 3400 events/year.
- $\sim$ 3 years of cooling down underground required for the background to be less than γ's
- Other isotopes with long enough lifetime have Q-value<3 MeV

isotope	Q (MeV)	$T_{1/2}$
^{54}Mn	1.4	312d
^{56}Co	4.6	77d
^{57}Co	0.8	272d
^{58}Co	2.3	71d
^{60}Co	2.8	5.3yr

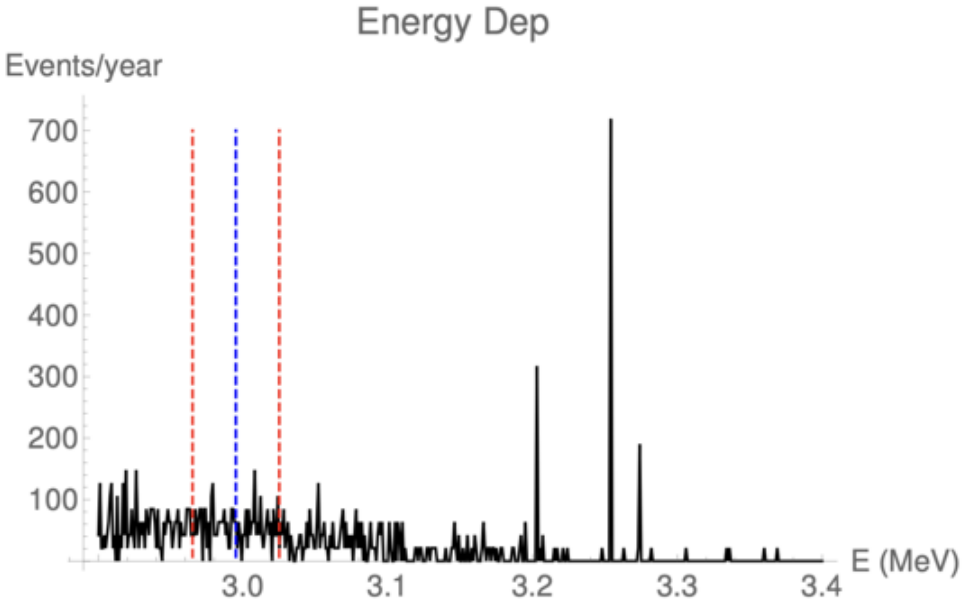

Other Background Sources & Pile-Up

- Other background sources (α and β from radioactivity, radon, cosmic μ, etc...) are estimated to be negligible
- Due to slow drift velocity of ions, pile-up backgrounds could be an issue
- The drift time for 160 cm maximum drift length is $\sim$7s
- Estimated assuming events can be separated if they are 10cm$\times$10cm$\times$10cm away
- For natural Se $2\nu2\beta + 2\nu2\beta \simeq 0.06$ evts/yr ROI $< \gamma$
- However, for enriched Se, 8.1 evts/yr ROI $\Rightarrow$ dominant

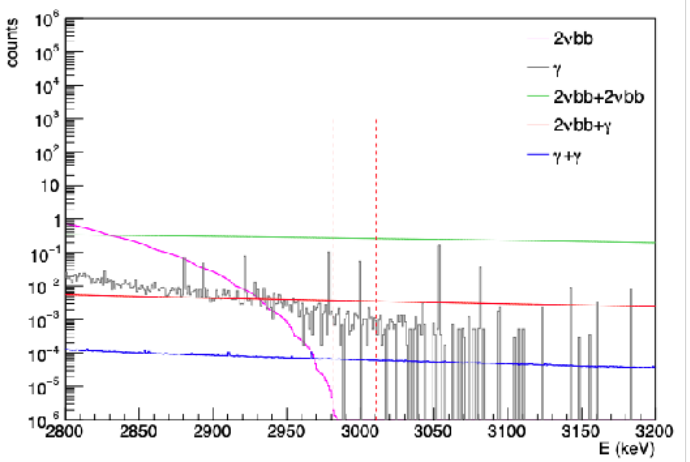

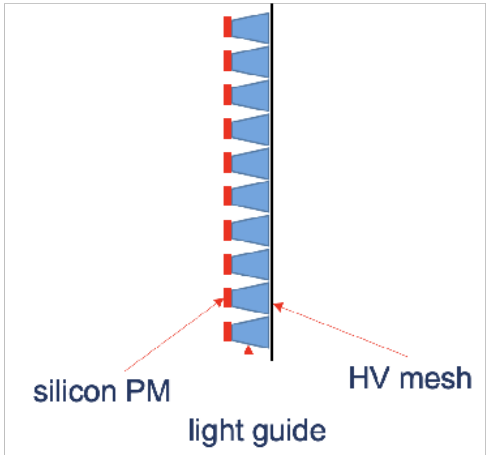

Can be removed by adding scintillation light read-out with silicon PM at the HV end

Summary

- γ backround, with 20 cm lead (and without topological cuts) 0.29 ± 0.06 events/year.
- ^{20}F background $\sim$0.1 evt/yr with HDPE inside lead
- However neutron-induced γ's most likely will require HDPE to be placed outside the lead shielding (work in progress)
- Cosmogenic muon activation can be reduced by storing the materials underground

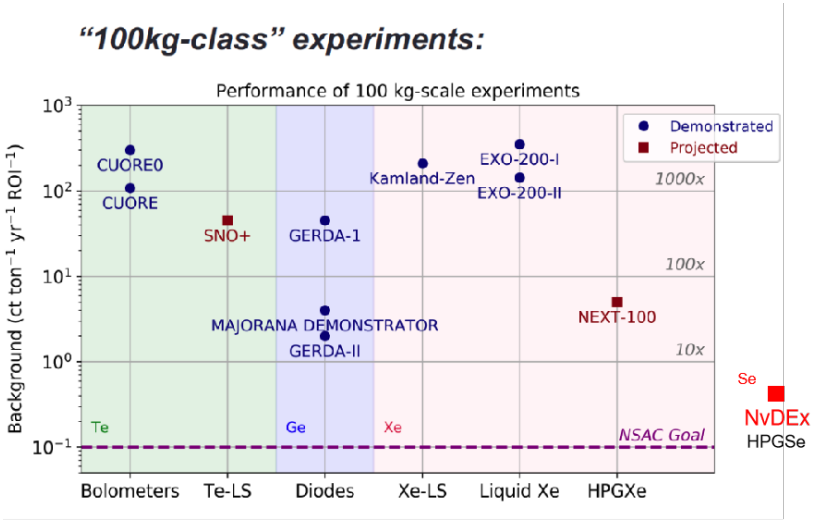

Extremely low-background can be achieved, significantly better than other similar experiments. Very good potential for scalability

- Assuming 0 background, Natural Se $\rightarrow T_{1/2} = 4 \times 10^{25}$ (90%cl, 5 yrs), enriched Se $\rightarrow T_{1/2} = 4 \times 10^{26}$ (90%cl, 5 yrs)

Backup Slides

Energy Resolution

- Q-value for ^{82}Se=2.995 MeV, Ionization energy $W_{SeF6} \simeq 32$ eV, $\Rightarrow N_e = 2.36 \times 10^4$
- Fano Factor $\Rightarrow$ lower bound to the energy resolution (cannot get better than this). For SeF_6, at 3 MeV:

$$\sigma/\mathrm{E} = 0.142\% \qquad \mathrm{FWHM/E} = 2\sigma\sqrt{\mathrm{Log}[4]} = 0.34\%$$

- Energy resolution is worsened by the presence of noise, etc...
- Other factors to be taken into account: changing focusing efficiency (need to reach ∼100%), sensor temperature variation, etc...
- In the simulations, assumed

$$\mathrm{FWHM} = 1\% \qquad \mathrm{ROI} = 2.98 - 3.01\ \mathrm{MeV}$$

Background & $0\nu2\beta$ Searches

A crucial requirement for any $0\nu2\beta$ experiment is an extremely low-background environment:

$$\text{No Background} \Rightarrow T^{0\nu}_{1/2} \propto MT$$

$$\text{Background} \Rightarrow T^{0\nu}_{1/2} \propto \sqrt{\frac{MT}{b\Delta E}}$$

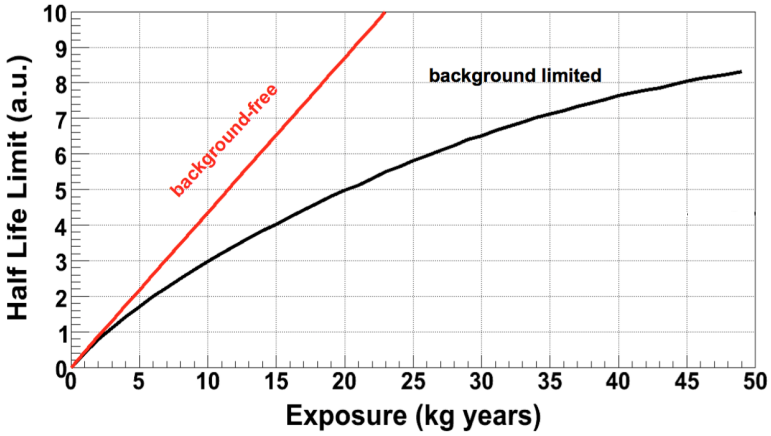

- CJPL$\Rightarrow$ Cosmogenic background strongly suppressed
- ^{82}Se $\Rightarrow$ very high Q-value (2.995 MeV), higher than most of the environmental γ's
- Better energy resolution without avalanche amplification (1% FWHM)

HV Ripples

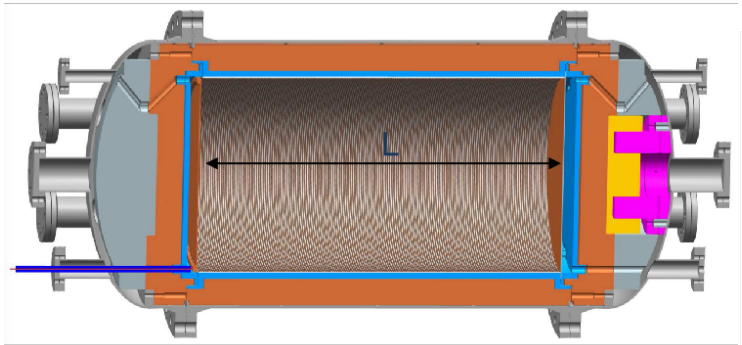

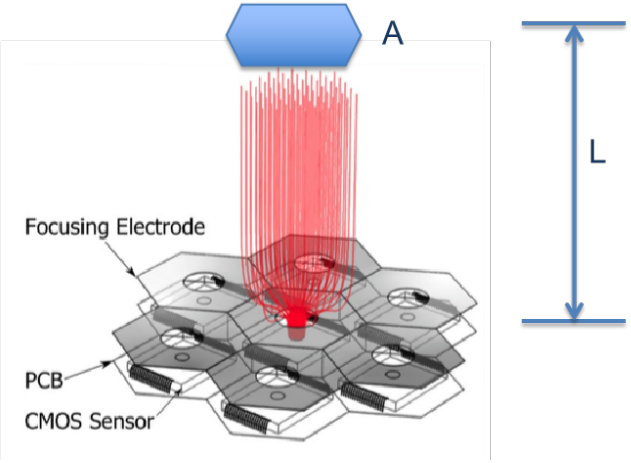

Induced charge on sensor topmetal $Q = C \times U \Rightarrow$ $\Delta Q = \Delta C \times U + C\Delta U$. We want $\Delta Q < 30$, which means

- $\Delta U/U < 2.2 \times 10^{-7}$. For the HV power supply, the best ripple level that can be achieved is $\Delta U/U \simeq 10^{-5}$
- Possible solutions: using low-pass filters or rechargeable batteries
- $\Delta C/C < 2 \times 10^{-7} \Rightarrow \Delta L < 0.3$ micron

Vibrations

In order to avoid fluctuations of charge, must minimize impact of vibrations $\Delta L \rightarrow \Delta C$. Consider reducing vibration influence during the design.

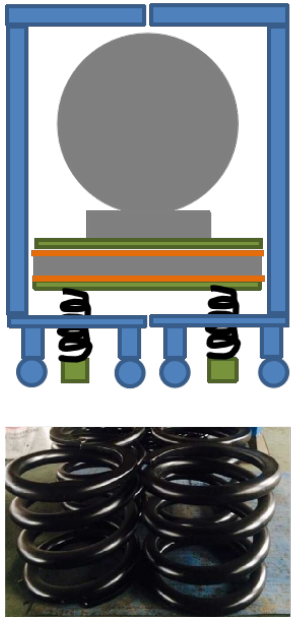

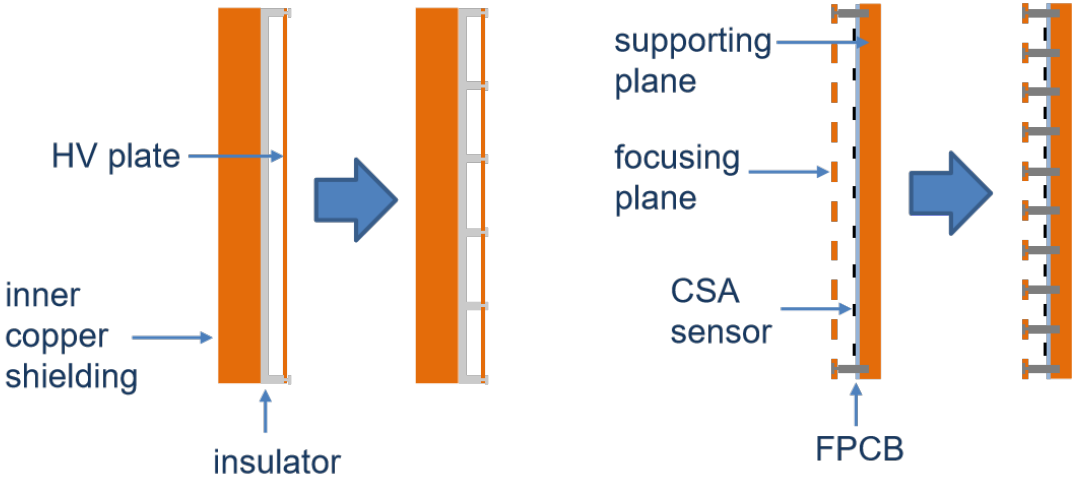

- Isolate the pressure chamber with springs etc.
- Avoid large thin planes
- Add supporting structures

Low Pass Filters

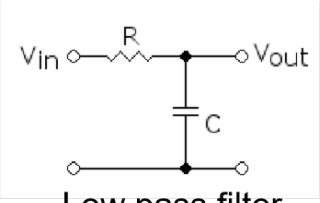

Low pass filter

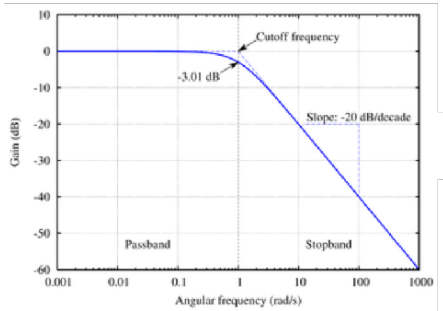

$$f_c = \frac{1}{2\pi RC}$$

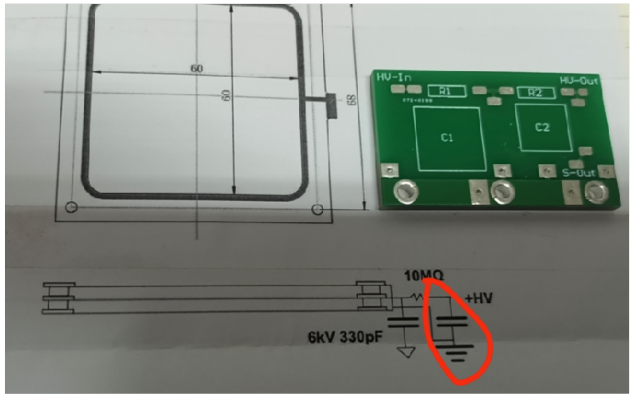

Low pass filter used in MWDC

For the HV power supply we found, the best ripple level is ΔU / U $= 10^{-5}$, we want $\Delta U < 10^{-7}$, $\Rightarrow$ use low pass filter

- $\Delta \mathrm{U_{out}} / \Delta \mathrm{U_{in}} \leq 10^{-2}$
- Assume the major ripple frequency = 50 Hz, $\Rightarrow f_c = 0.5$ Hz $\Rightarrow$ too close to signal time scale
- may consider high-order filters
- Another option is using rechargeable batteries

γ Background

- Trace of radioactive elements will be present in the rocks surrounding the experimental hall, the walls and the materials of the detector itself.
- The decays of these elements will produce particles that could provide a source of background
- α β and γ will be produced, however the first two are easily stopped, and do can be neglected. We will focus only on γ background
- ^{82}Se has high Q-value $\rightarrow$ ROI: $2.98 < E < 3.01$, higher than most of the γ's from natural radioactivity.
- ^{232}Th can be neglected (it's a big problem for Xe-based experiments, however), only relevant isotope is ^{238}U

γ lines

Main Issue

20 cm lead, only 1 high-energy γ's every $\sim 10^{12}$ decays hits the detector $\Rightarrow$ large MC sample needed to get decent statistics

- Only ^{214}Bi (from ^{238}U decay chain) and ^{208}Tl (^{232}Th) will create high energy γ's
- Those will be present in a very small fraction of decays (for ^{214}Bi, only 1 γ out of ~ 1000 will have $E > 2.7$ MeV)

Instead of simulating the full decay chain, we took the γ lines information from the ENDF/B-VIII.0 database and wrote a code that create γ's according to that distribution

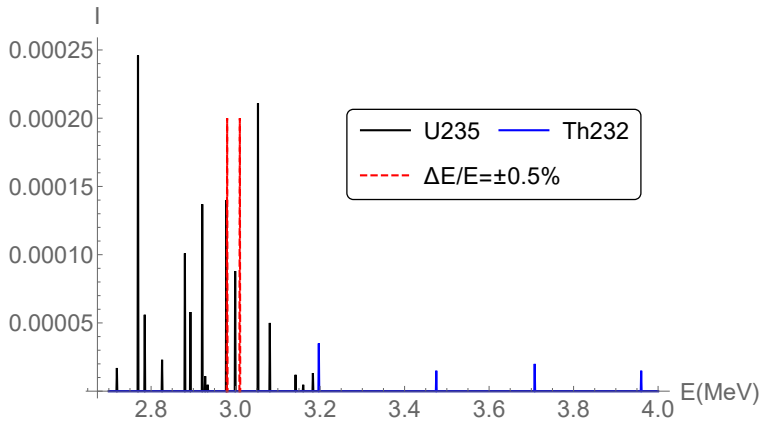

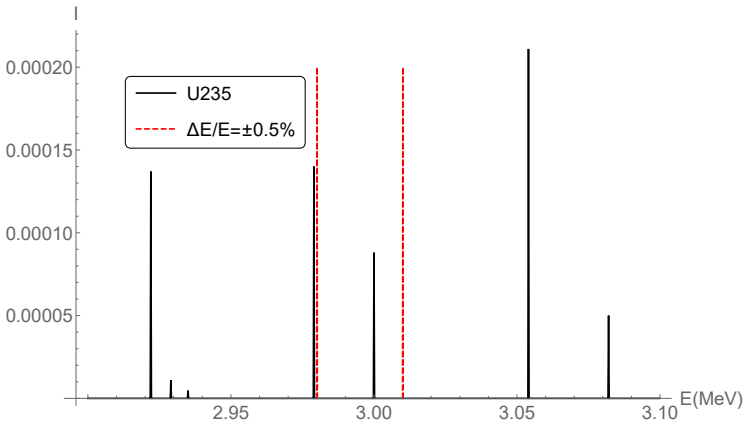

Simulation Software

- γ background was studied using Geant4 simulations, fast neutron background using both Geant4 and Fluka simulations
- Fluka is considerably faster for fast neutron simulations, but the implementation of the two-steps system we used for the γ background would be complicated
- For fast neutrons, it is crucial to include the best low-energies cross section available
- For Fluka, this is done using the PRECISION setting
- For Geant4, HP neutron inelastic cross section are contained in the G4HadronPhysicsQGSP_BERT_HP PhysicsLists, HP elastic cross sections can be included using G4HadronElasticPhysicsHP as well

Geometrical Splitting

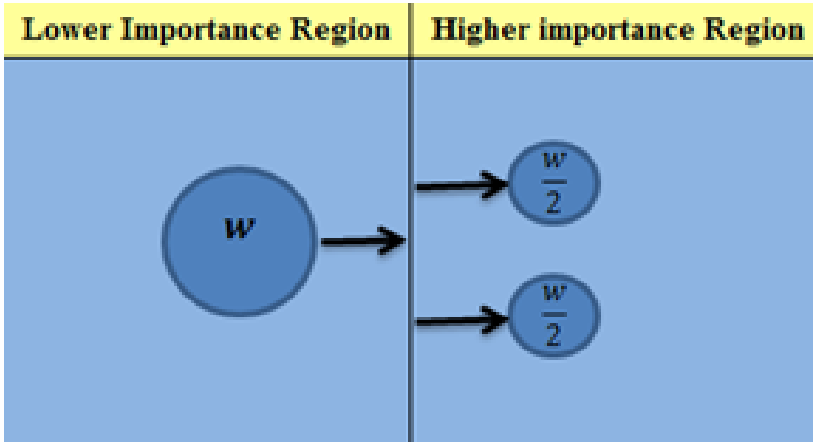

Each "split" particle should be considered with a weight $w_f = w_i/n$, where n is the number of copies created.

- 20 cm lead shield (ICS) divided into 15 (12) regions, weight$=\frac{1}{2}$ $\Rightarrow$ rescaling factor $2^{25} \sim 3 \times 10^7$
- Two-steps process: I recorded the position and momentum of each γ's entering the detector, and simulate the energy deposition separately

Estimation of statistical errors

- If geometrical bias is used, statistical errors are difficult to estimate
- For each configuration, a set of N simulations was run (all with the same MC sample, but the formula can be easily generalized for different MC samples)
- Standard deviation can be estimated as

$$\sigma = \sqrt{\frac{1}{N(N-1)} \sum_{i=1}^{N} (x_i - \bar{x})^2} \qquad \bar{x} = \frac{1}{N} \sum_{i=1}^{N} x_i$$

Energy Deposition

Very few high-energy γ's deposit all their energy in the detector

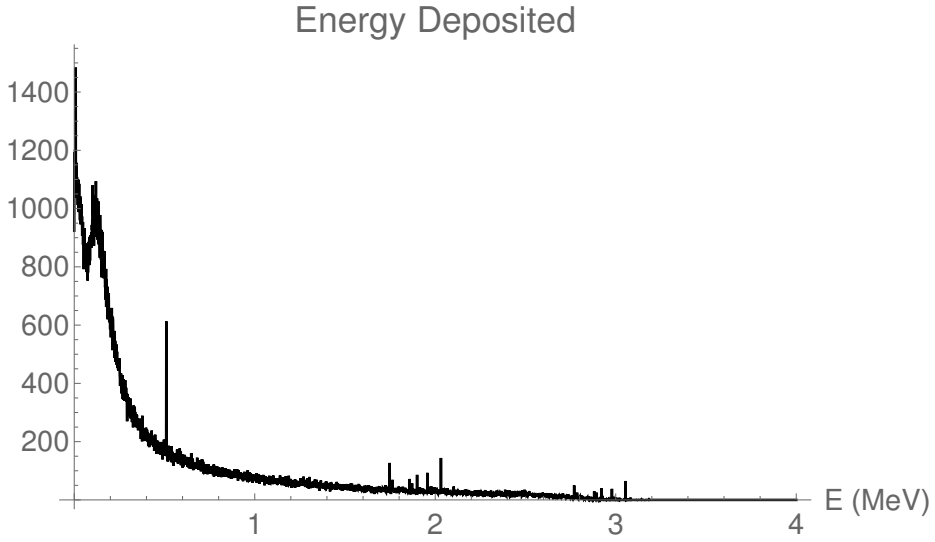

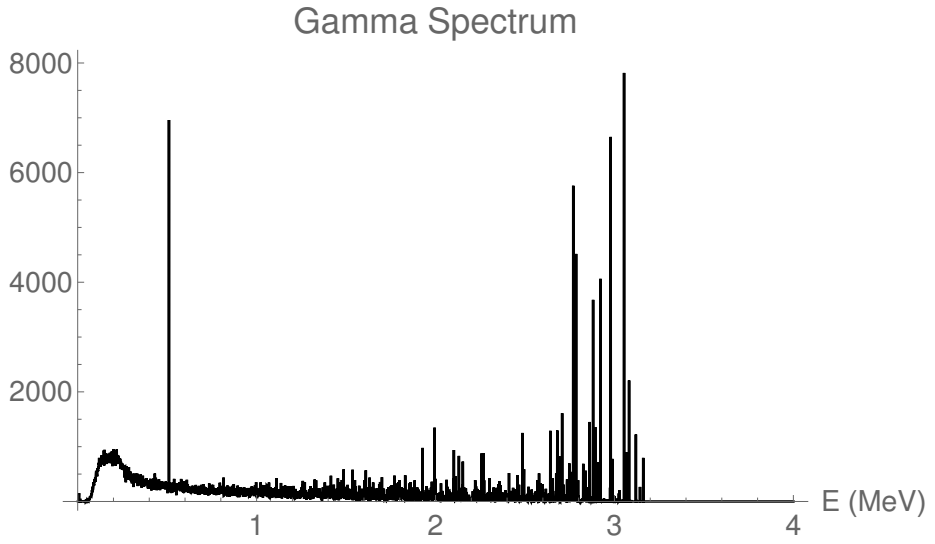

Neutron-Induced Gamma Background

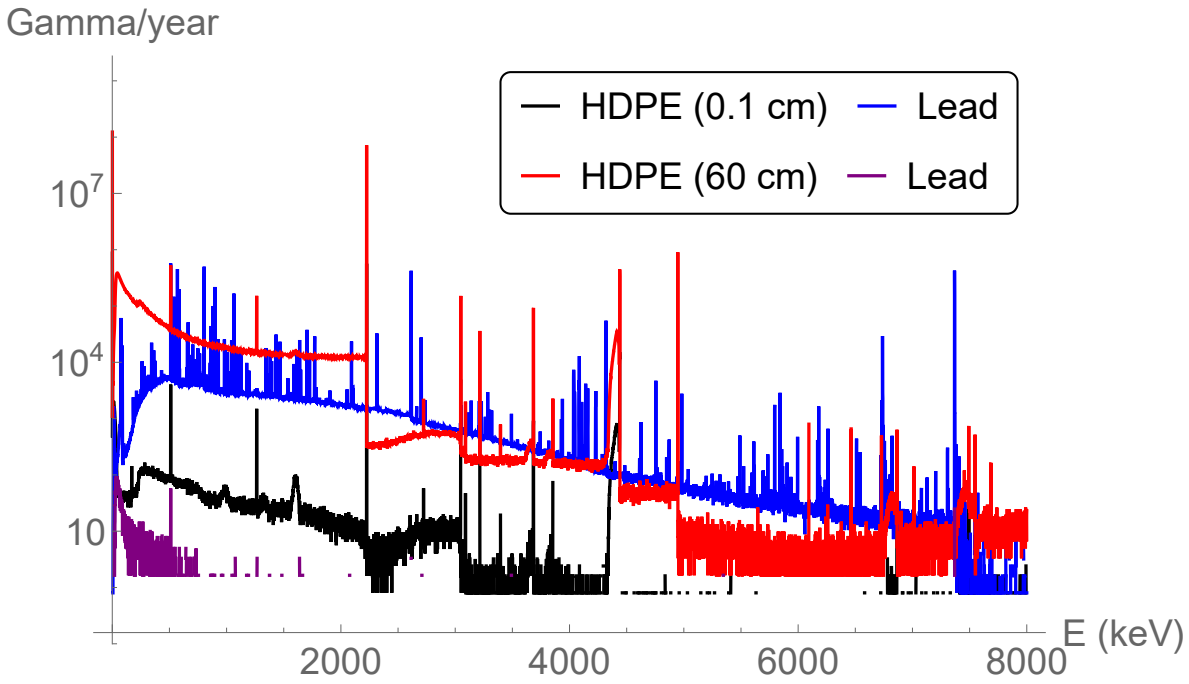

γ/year in HDPE and Lead shielding, for different thickness of the HDPE shield (0.1 cm, $\sim$ no HDPE shield, vs 60 cm).
All creation processes were taken into account, not just neutron activation (more γ's can be produced by interaction of γ with matter). You can clearly see the 7.37 MeV peak in lead due to ^{207}Pb, while in HDPE there are the 2.2 MeV peak due to H and 4.9 MeV peak due to C.

New Measurement of Neutron Spectrum

A new neutron spectrum has been presented in some talks (as far as I know, it is not published yet), where the energy response of the detector has been deconvoluted. It is (kind of) consistent at low energies, however there is an excess of high-energy neutrons

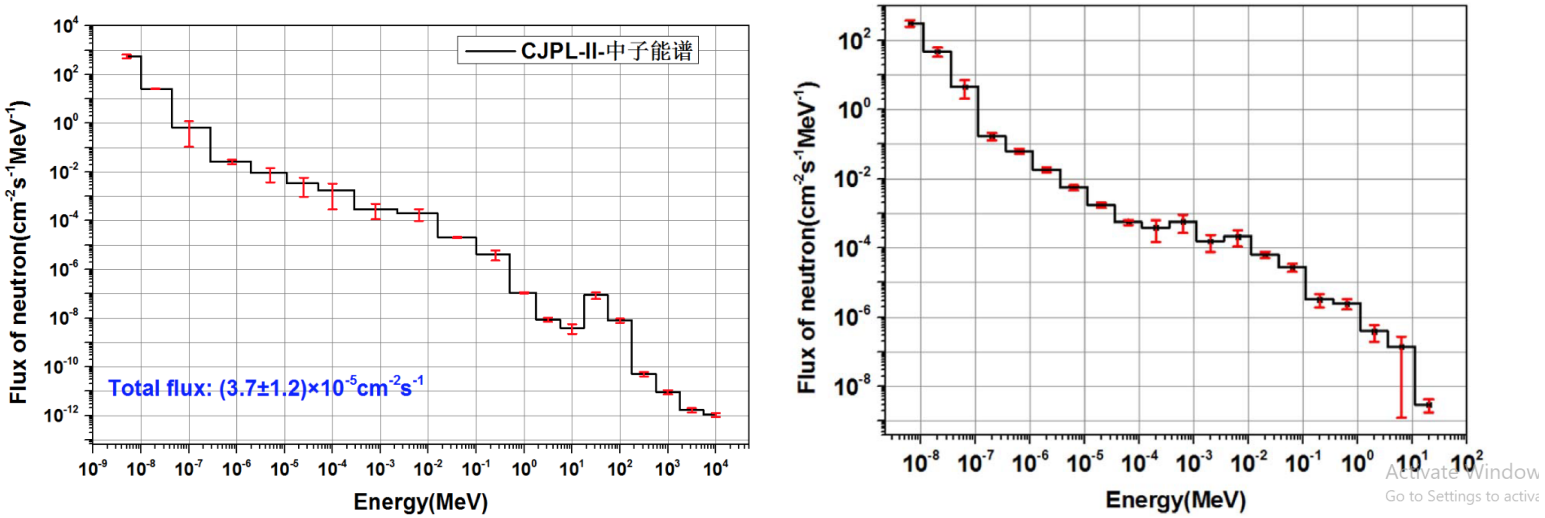

Right Panel: new measurement (2018). Left Panel: from Hu, Q *et al.*, Nucl.Instrum.Meth.A 859 (2017) 37-40

New Measurement of Neutron Spectrum

In CJPJ new measurement: neutrons with $E > 20$ MeV are $\sim$24% of the total flux (3.7×10^{-5} cm^{-2}s^{-1}) $\Rightarrow \sim 10^{-5}$ cm^{-2}s^{-1}, however the neutron flux from cosmogenic muons is estimated to be 8.37×10^{-11}cm^{-2}s^{-1} (**Su Jian** *et al.*, **High Power Laser and Particle Beams, 24 (12):3015, 2012**). This is consistent with other measurements, such as at Gran Sasso (**Bruno, Fulgione, Eur.Phys.J.C 79 (2019) 9, 747**, measured flux: 7.5×10^{-10} cm^{-2}s^{-1}, theoretical estimation in **Mei, Hime, Phys.Rev.D 73 (2006) 053004.**: 7.3×10^{-10} cm^{-2}s^{-1}).

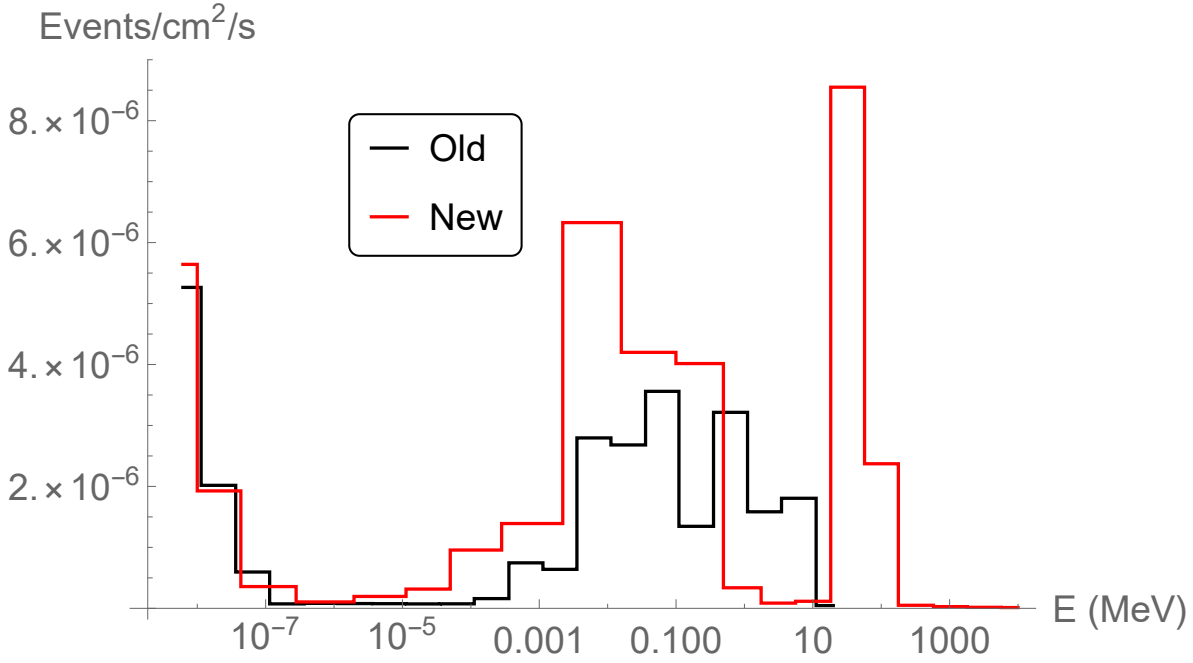

$\sim 7 \times 10^{-10} \ll$
$\sim 1 \times 10^{-5}$